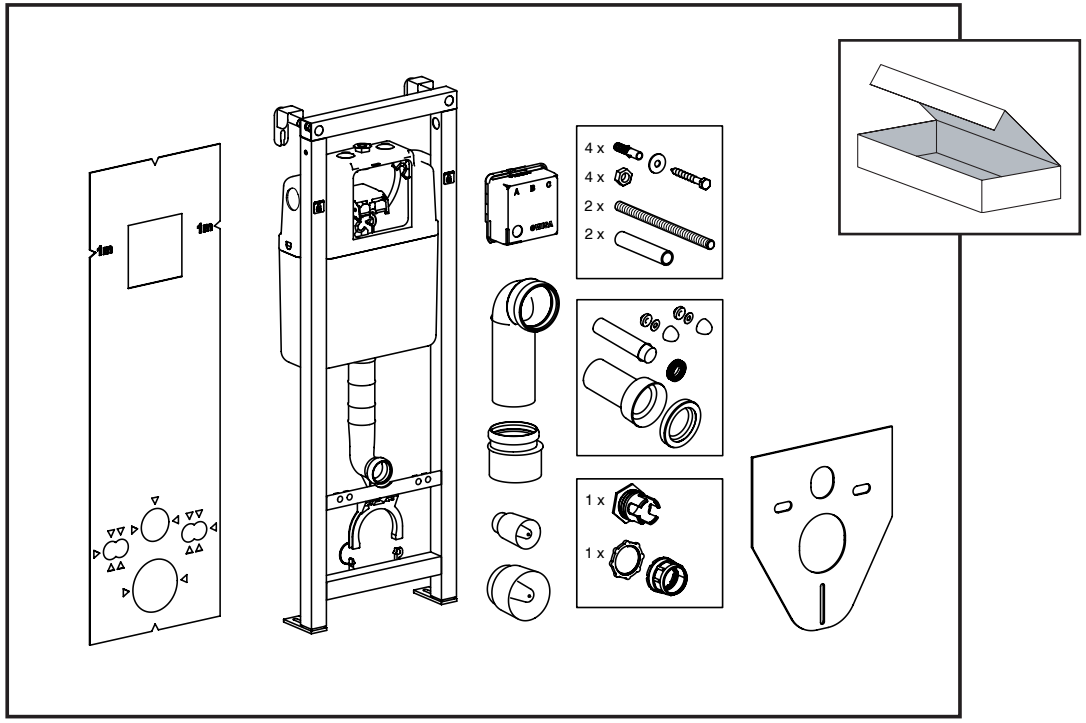

GBG TRIOMONT XS

www.gustavsberg.com

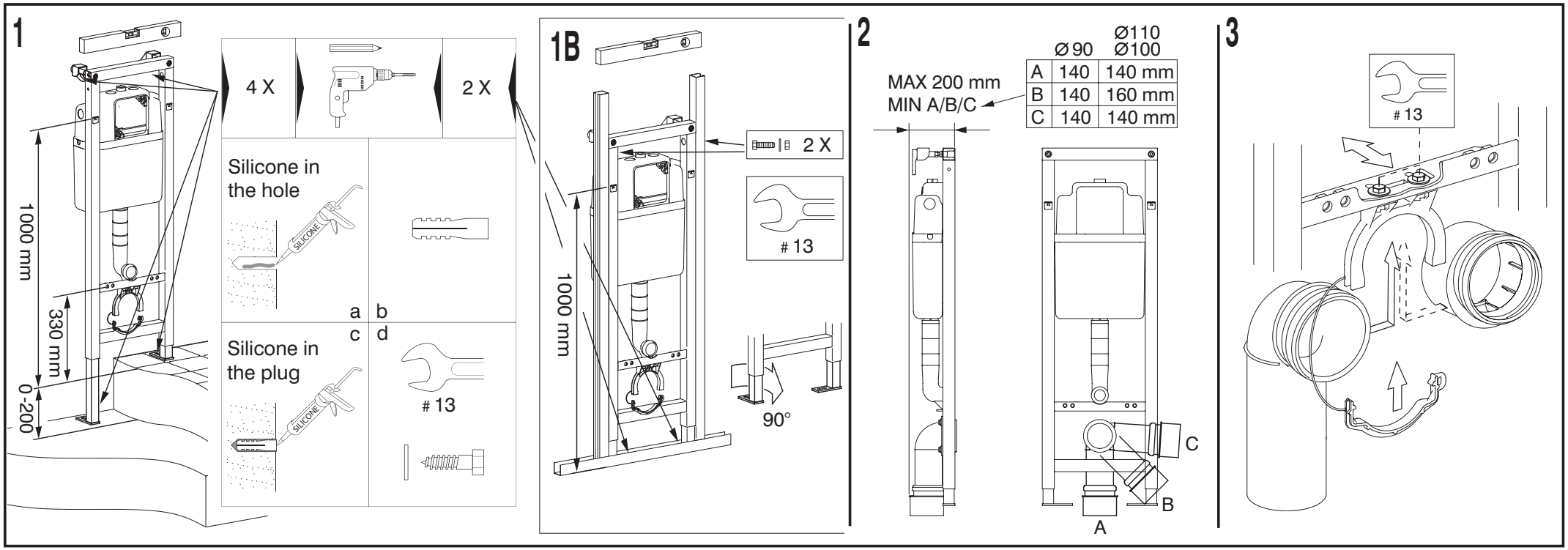

	Ø 90	Ø110 Ø100
A	140	140 mm
B	140	160 mm
C	140	140 mm

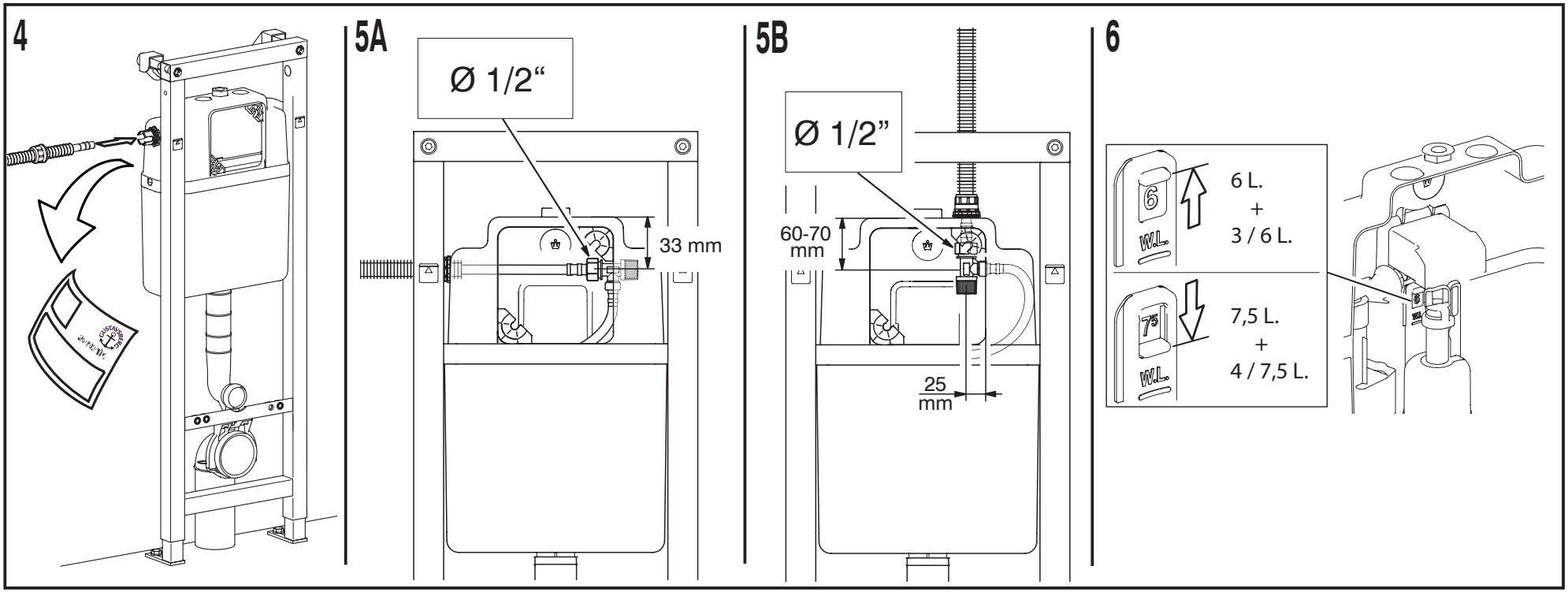

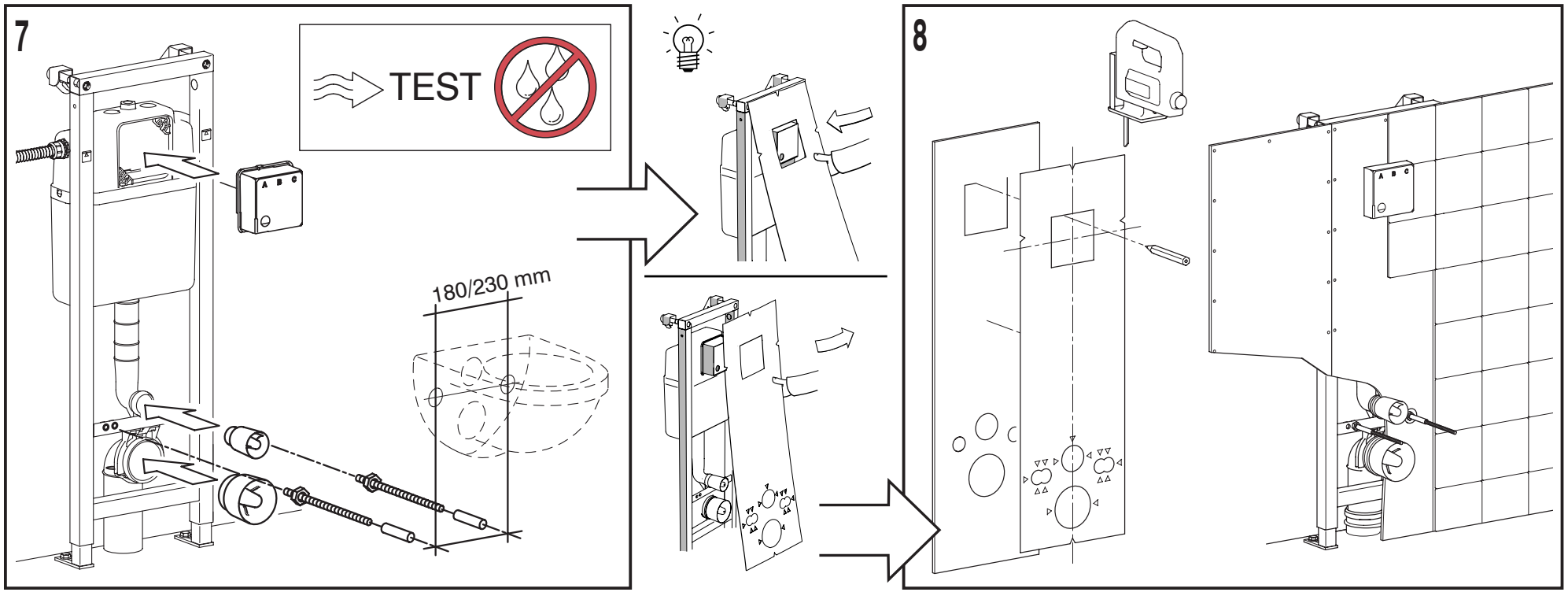

ART.NR. 1449.979763 VERSIE 2009.02